Acme Sanitary Ware Co Ltd
Acme Building, 22-28 Nanking Street, Kowloon, Hong Kong
Tel: 2388 7171 Fax: 2710 8012
E-mail: acme@acmesanitary.com.hk
Website: www. acmesanitaryware.com.hk

GROHE Pure Freude an Wasser

PROJECT		REF		REV	ITEM CODE	
LOCATION		DATE			PAGE	

SANITARY WARE SPECIFICATION SHEET

Item Descriptions	GROHE (Germany) "Allure Brilliant" Chrome plated shower outlet elbow, 1/2"
Dimensions	L66 x W52 x H52 mm
Model	27707000
Finish	Chrome Plated
Country of origin	Germany
Manufacturer	GROHE Limited
Supplier	Acme Sanitary Ware Co. Ltd Mr. Eric Wong/ Mr. Don Yuen
Contact Tel/Fax E-mail Website	(852) 2388-7171 / (852) 2710-8012 acme@acmesanitary.com.hk www.acmesanitary.com.hk

Illustration/ Drawing

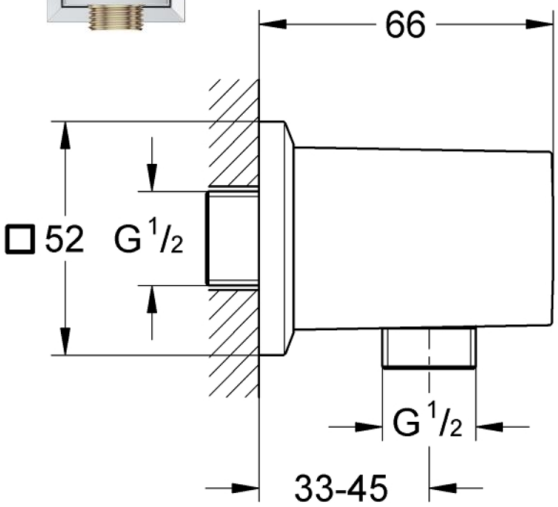

"Allure Brilliant"
Shower outlet elbow, 1/2"

- male thread
- protected against backflow
- material: metal
- **GROHE StarLight** chrome finish

27707000 27707DC0 27707AL0 27707A00

Colour options:

- 000 I StarLight Chrome
- DC0 I SuperSteel
- DA0 I Warm Sunset
- A00 I Hard Graphite
- AL0 I Brushed Hard Graphite
- GL0 I Cool Sunrise
- GN0 I Brushed Cool Sunrise
- DL0 I Brushed Warm Sunset
- BE0 I Polished Nickel
- EN0 I Brushed Nickel

Note: YouTube HK (Allure Brilliant | Product Video) https://www.youtube.com/watch?v=85P78j7RRsg

WRAS

** All information of the above is for the reference only. No prior notice is made if any changes.*

Acme Sanitary Ware Co Ltd
Acme Building, 22-28 Nanking Street, Kowloon, Hong Kong
Tel: 2388 7171 Fax: 2710 8012
E-mail: acme@acmesanitary.com.hk
Website: www. acmesanitaryware.com.hk

GROHE Pure Freude an Wasser

PROJECT		REF		REV	ITEM CODE	
LOCATION		DATE			PAGE	

SANITARY WARE SPECIFICATION SHEET

GROHE
ALLURE BRILLIANT

LIKE A DIAMOND

With its crisp planes, intriguing angles and cut-out details, Allure Brilliant illustrates the absolute precision that can only be achieved through years of experience and an unfaltering passion for innovation. Complex without being complicated, faceted faucets add a new dimension to bathroom design and a new dimension to water. With its gem-like quality and structured shape, Allure Brilliant exudes architectural appeal.

Our designers and engineers have taken on the role of lapidaries, refining and polishing with utmost care to create a collection of intriguing designs, which will challenge your perception of bathroom fittings.

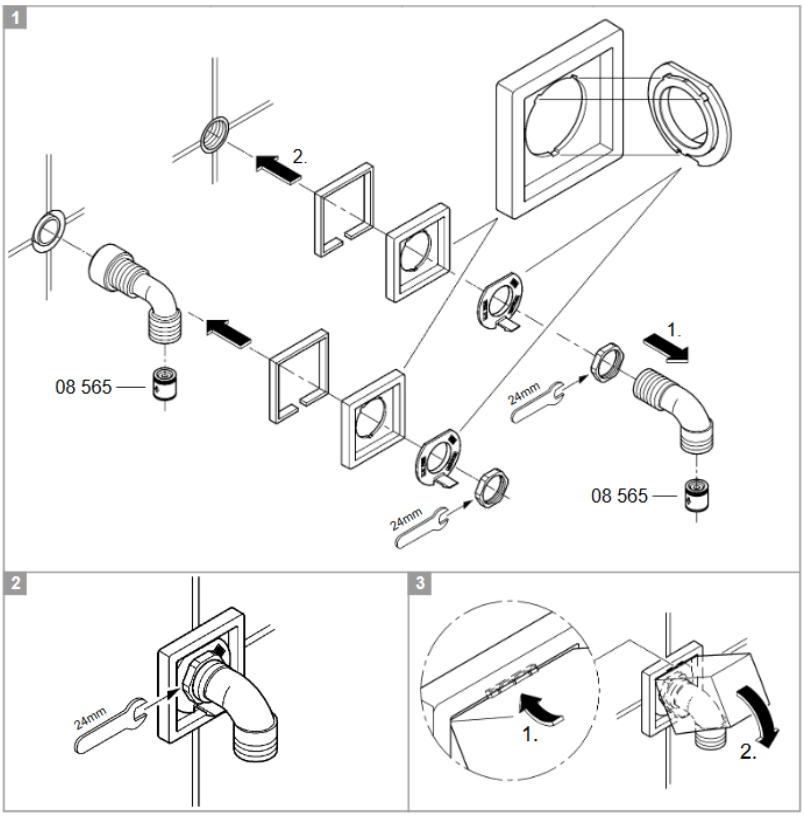

SPARE PARTS

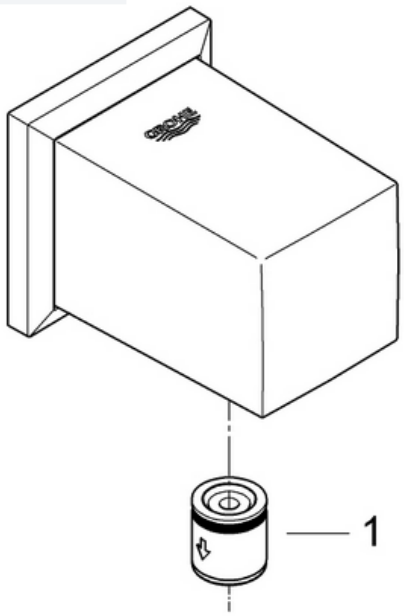

Pos.-nr.	Prod. description	Order-nr.
1	Non-return valve	08565000

* Optional accessories

Note:

** All information of the above is for the reference only. No prior notice is made if any changes.*